ASSOCIATED MATERIALS
INCORPORATED
3773 STATE ROAD
CUYAHOGA FALLS, OH 44223

L F SCHMIDT LICENSE No. 43409 STATE OF FLORIDA PROFESSIONAL ENGINEER

Digitally signed by Lyndon F Schmidt
Date: 2025.06.10 14:27:59 -04'00'

This item has been digitally signed and sealed by **L. F. Schmidt, P.E.** on the date adjacent to the seal.

Printed copies of this document are not considered signed and sealed and the signature must be verified on any electronic copies.

THIS PRODUCT APPROVAL IS VALID ONLY FOR THE STATE OF FLORIDA

ALSIDE SERIES QUAD 4 (Q4)

ALUMINUM "FLAT V GROOVE" SOFFIT

GENERAL NOTES

1. This product has been evaluated and is in compliance with the 8th Edition (2023) Florida Building Code excluding the "High Velocity Hurricane Zone" (HVHZ).
2. Product anchors shall be as listed and spaced as shown on details. Anchor embedment to base material shall be beyond wall dressing or stucco.
3. Site conditions not covered by this drawing are subject to further engineering analysis.
4. Wood/CMU wall construction, by others, must be designed properly to receive loads from the soffit and/or 2" x 2" batten strips.
5. Aluminum soffits shall conform to the specification and labelling requirements of FBC Section 1709.10.

TABLE OF CONTENTS

SHEET #	***DESCRIPTION***
1	Typical elevations & general notes
2	Panel details & bill of materials
3	Single Span Soffit details & design pressures (J-Channel @ each end) - Staple Installation
4	Single Span Soffit details & design pressures (Fascia & J-Channel) - Staple Installation
5	Twin Span Soffit details & design pressures (Fascia & J-Channel) - Staple Installation
6	Twin Span Soffit details & design pressures (Fascia & J-Channel) - Nail Installation

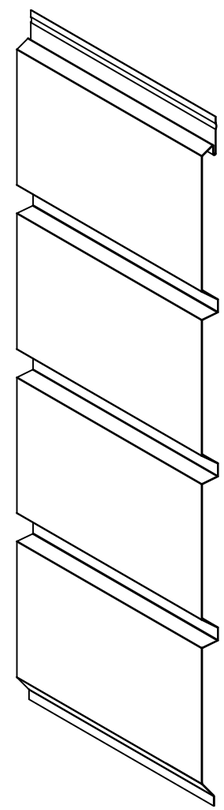

SOLID

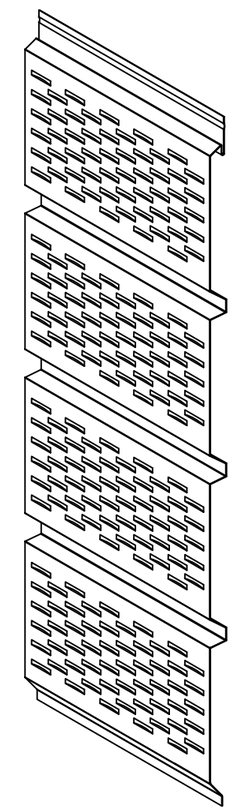

FULL VENT

QUAD 4 (Q4)
(0.012" THICK)

Documents Prepared By:
Lyndon F. Schmidt
P.E. No. 43409
RW BUILDING CONSULTANTS, INC.
P.O. Box 230, Valrico, FL 33595
Phone No.: 813.659.9197
FBPE Registry No. 9813

PRODUCT: *ALUMINUM SOFFIT*

PART OR ASSEMBLY: *TYPICAL ELEVATIONS & GENERAL NOTES*

REVISIONS

NO.	DATE	BY

DATE: 5/19/25
SCALE: N.T.S.
DWG. BY: LFS
CHK. BY: RW
DRAWING NO.: FL-46697.5
SHEET 1 OF 6

© 2025 R.W. Building Consultants Inc.

Z:\2023 FBC Drawings\Associated Materials, Inc\FL-46697\FL-46697.5.dwg

SOFFIT AIR FLOW TABLE

SOFFIT TYPE	AIR FLOW		
QUAD 4 (Q4)	FREE FLOW AREA (in^2/ft^2)	FREE FLOW AREA (in^2/linear ft)	% FREE FLOW AREA
FULL VENT PATTERN	**14.0**	**18.6** *	**9.7 %**

* FREE FLOW AREA IS PER LINEAR FOOT OF OVERHANG (SPAN "A" ON SHEETS 3, 4 & 5) PER PANEL

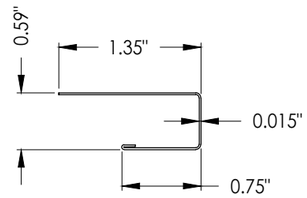

3 **J-CHANNEL**

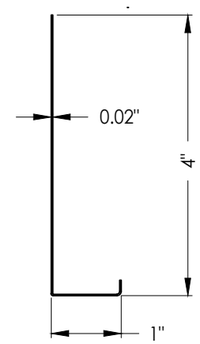

4 **FASCIA**

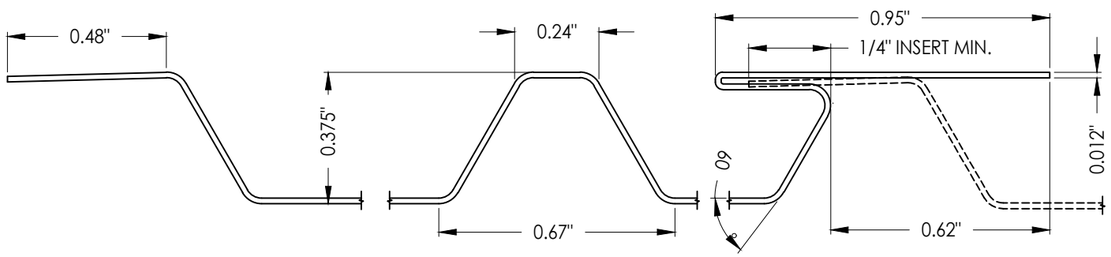

RIB & END DETAILS

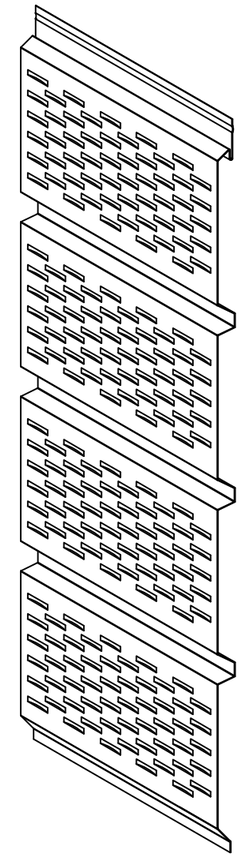

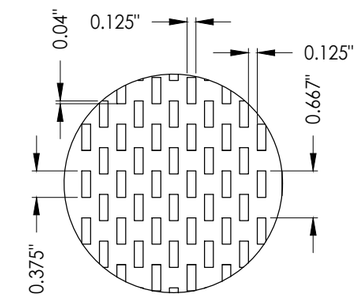

LOUVER PATTERN
(LOUVERS FORMED IN SAME DIRECTION AS RIBS)

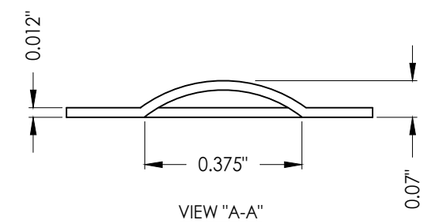

VIEW "A-A"

VENT DETAILS

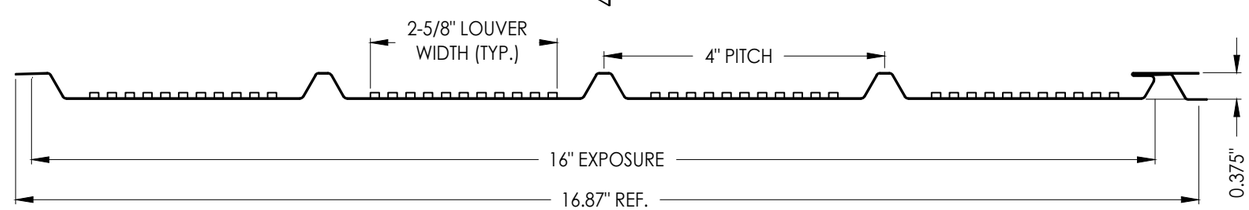

1 **QUAD 4 (Q4) PANEL**
FULL VENT

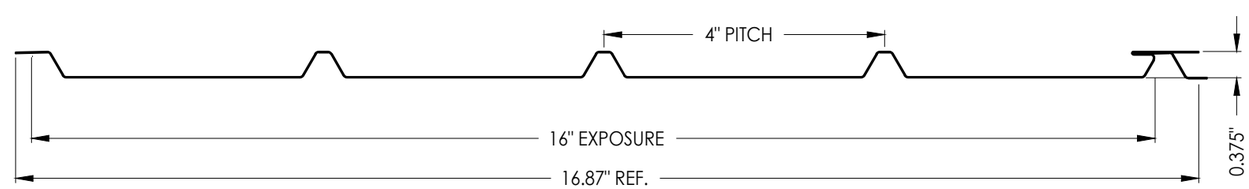

2 **QUAD 4 (Q4) PANEL**
SOLID

BILL OF MATERIALS

ITEM #	DESCRIPTION	MATERIAL
C	1-1/2" X 1-1/2" NAILING STRIP (G >= 0.42)	WOOD
1	QUAD 4 (Q4) ALUMINUM SOFFIT (FULL VENT)	ALUM 3105
2	QUAD 4 (Q4) ALUMINUM SOFFIT (SOLID)	ALUM 3105
3	ALUMINUM J-CHANNEL	ALUM 3105
4	ALUMINUM FASCIA	ALUM
5	1/4" CROWN X 1" LONG X 18 GA. STAPLE	STEEL
6	14 GA. X 1-1/2" LONG BRAD NAIL w/ 3/16" Ø HEAD	STEEL

Documents Prepared By:
Lyndon F. Schmidt
P.E. No. 43409

RW BUILDING CONSULTANTS, INC.
P.O. Box 230, Valrico, FL 33595
Phone No.: 813.659.9197
FBPE Registry No. 9813

PRODUCT: ALUMINUM SOFFIT

PART OR ASSEMBLY: PANEL DETAILS & BILL OF MATERIALS

NO.	DATE	BY

REVISIONS

DATE: 5/19/25
SCALE: N.T.S.
DWG. BY: LFS
CHK. BY: RW
DRAWING NO.: FL-46697.5
SHEET 2 OF 6

© 2025 R.W. Building Consultants Inc.

Z:\2023 FBC Drawings\Associated Materials, Inc\FL-46697\FL-46697.5.dwg

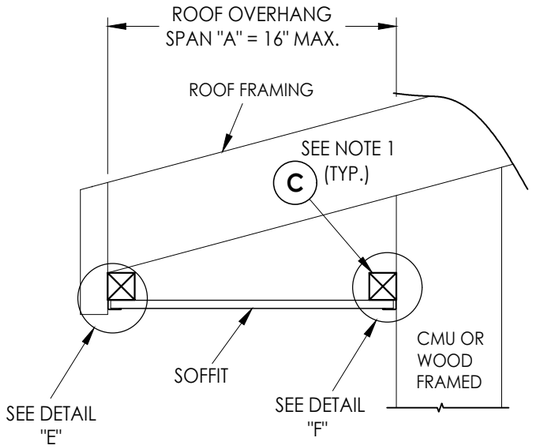

SIDE VIEW - SINGLE SPAN w/ J-CHANNELS

(Shown w/ truss/framing overhang)

SINGLE SPAN w/ J-CHANNELS			
QUAD 4 (Q4) SOFFIT 16" MAX. SINGLE SPAN LENGTH	SPAN "A"	DESIGN PRESSURE (PSF)	
		POSITIVE	NEGATIVE
SOLID OR FULL VENT SOFFIT	8"	+120	-120
	12"	+70	-70
	16"	+40	-40

REFER TO THE SOFFIT STAPLE INSTALLATION BELOW

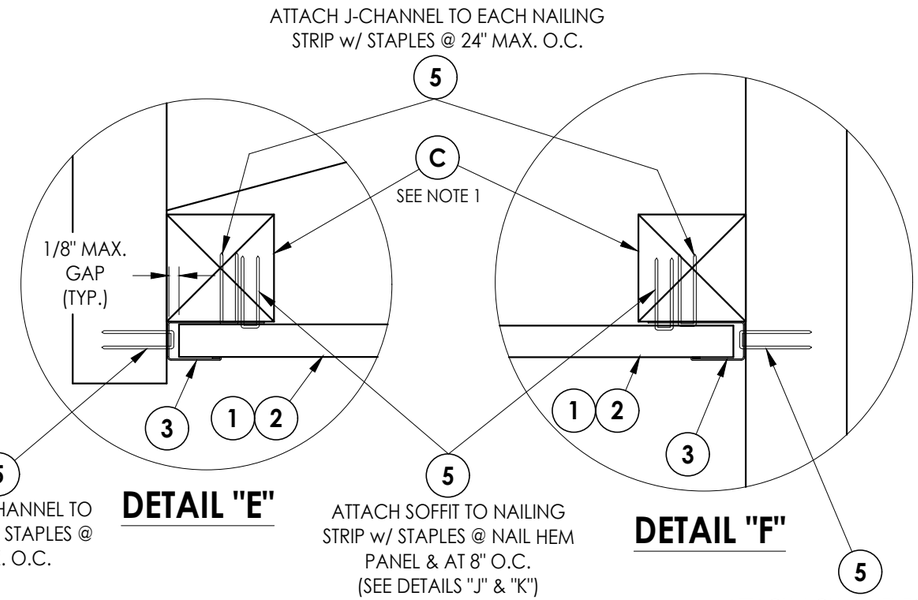

DETAIL "E"

DETAIL "F"

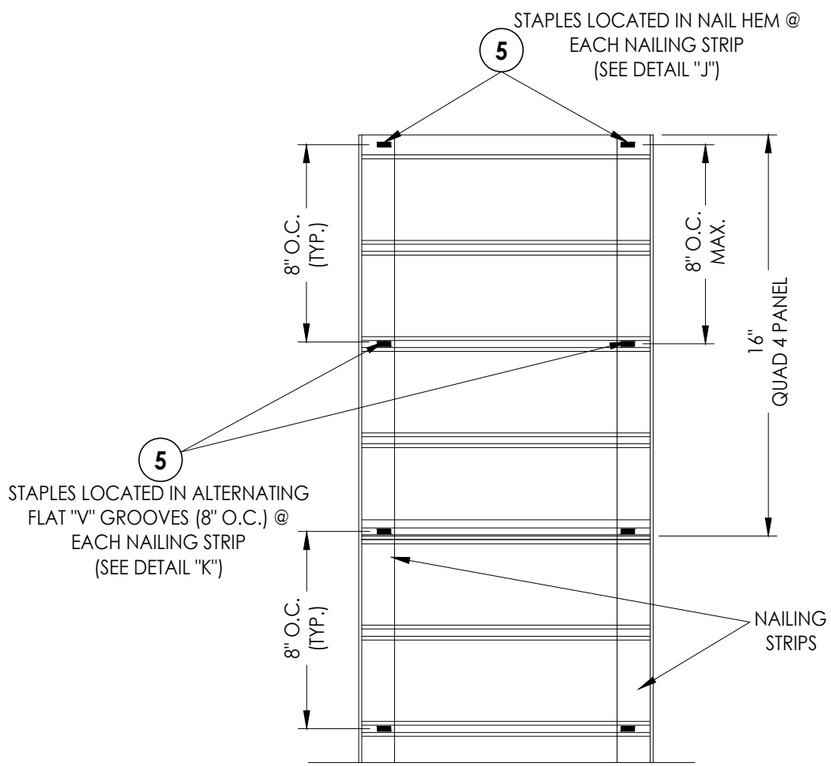

16" MAX. SINGLE SPAN

(J-CHANNEL NOT SHOWN)

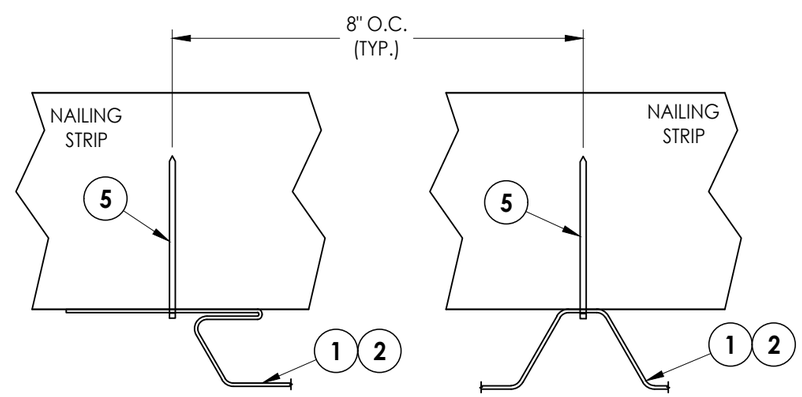

DETAIL "J"

STAPLE @ HEM

DETAIL "K"

STAPLE @ FLAT "V" GROOVE

NOTES:

1. WOOD FRAMING, NAILING STRIPS AND CONNECTIONS TO BE DESIGNED BY THE ARCHITECT OR ENGINEER OF RECORD.
2. STAPLES SHALL BE CORROSION RESISTANT AND PENETRATE A MINIMUM OF 7/8" INTO SUPPORT FRAMING.

Documents Prepared By:
Lyndon F. Schmidt
P.E. No. 43409

RW BUILDING CONSULTANTS, INC.
P.O. Box 230, Valrico, FL 33595
Phone No.: 813.659.9197
FBPE Registry No. 9813

PRODUCT: ALUMINUM SOFFIT

PART OR ASSEMBLY: SINGLE SPAN SOFFIT DETAILS & DESIGN PRESSURES

NO.	DATE	REVISIONS	BY

DATE: 5/19/25
SCALE: N.T.S.
DWG. BY: LFS
CHK. BY: RW
DRAWING NO.: FL-46697.5
SHEET 3 OF 6

© 2025 R.W. Building Consultants Inc.

Z:\2023 FBC Drawings\Associated Materials, Inc\FL-46697\FL-46697.5.dwg

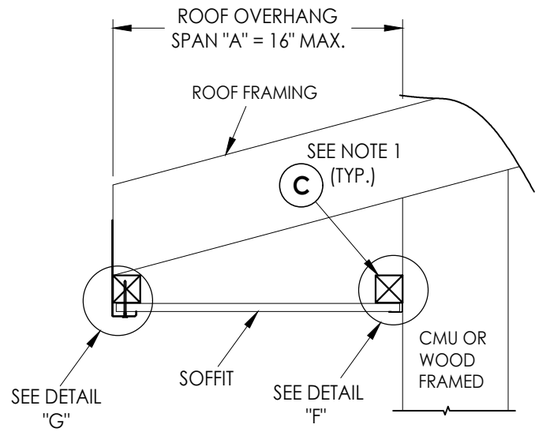

SIDE VIEW - SINGLE SPAN w/ FASCIA & J-CHANNEL

(Shown w/ truss/framing overhang)

SINGLE SPAN w/ FASCIA & J-CHANNEL			
QUAD 4 (Q4) SOFFIT 16" MAX. SINGLE SPAN LENGTH	SPAN "A"	DESIGN PRESSURE (PSF)	
		POSITIVE	NEGATIVE
SOLID OR FULL VENT SOFFIT	8"	+120	-120
	12"	+60	-60
	16"	+40	-40

REFER TO THE SOFFIT STAPLE INSTALLATION BELOW

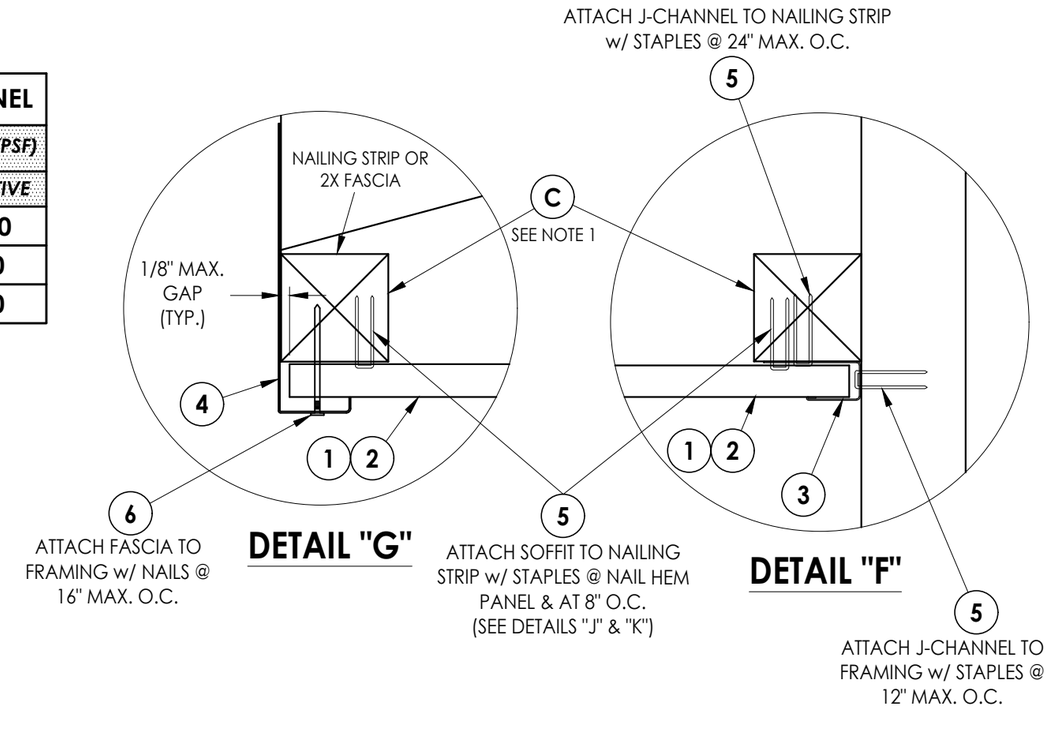

DETAIL "G"

DETAIL "F"

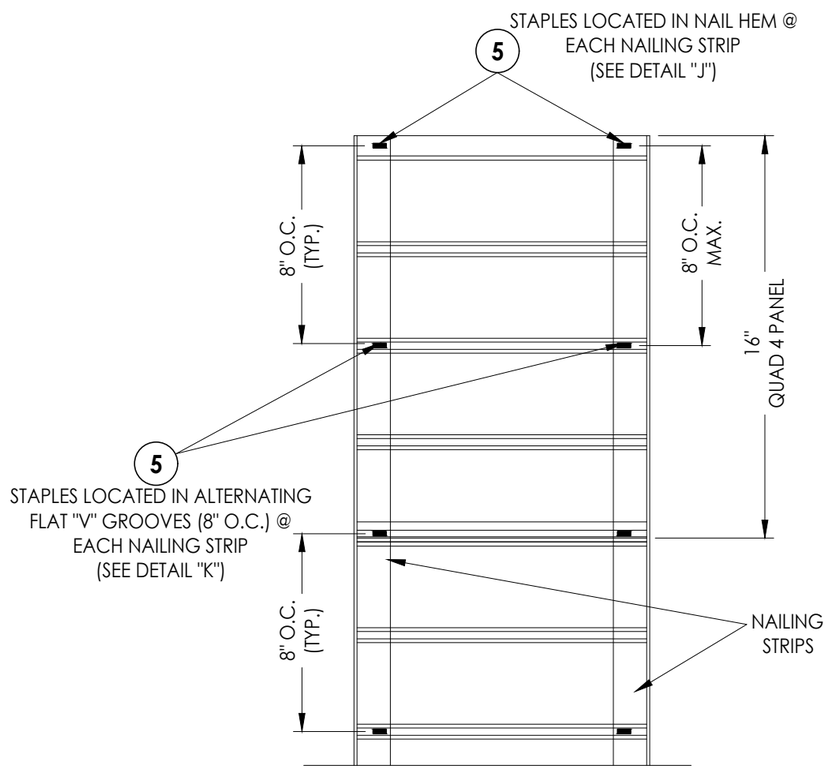

16" MAX. SINGLE SPAN

(FASCIA & J-CHANNEL NOT SHOWN)

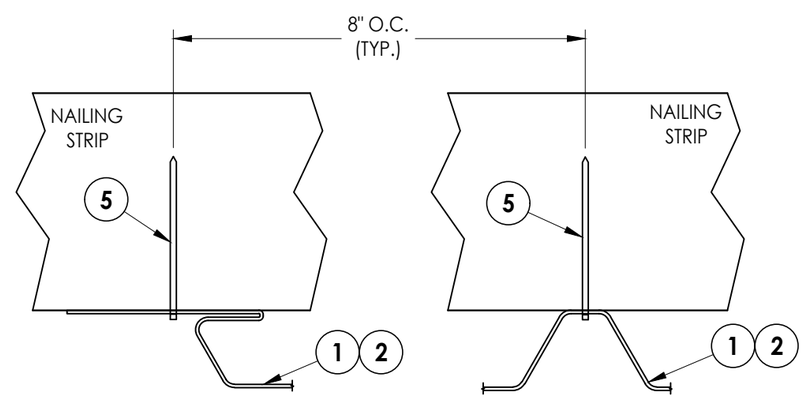

DETAIL "J"

STAPLE @ HEM

DETAIL "K"

STAPLE @ FLAT "V" GROOVE

NOTES:

1. WOOD FRAMING, NAILING STRIPS AND CONNECTIONS TO BE DESIGNED BY THE ARCHITECT OR ENGINEER OF RECORD.
2. STAPLES & NAILS SHALL BE CORROSION RESISTANT AND PENETRATE A MINIMUM OF 7/8" INTO SUPPORT FRAMING.

Documents Prepared By:
Lyndon F. Schmidt
P.E. No. 43409
RW BUILDING CONSULTANTS, INC.
P.O. Box 230, Valrico, FL 33595
Phone No.: 813.659.9197
FBPE Registry No. 9813

PRODUCT: ALUMINUM SOFFIT

PART OR ASSEMBLY: SINGLE SPAN SOFFIT DETAILS & DESIGN PRESSURES

NO.	DATE	REVISIONS	BY

DATE: 5/19/25
SCALE: N.T.S.
DWG. BY: LFS
CHK. BY: RW
DRAWING NO.: FL-46697.5
SHEET 4 OF 6

© 2025 R.W. Building Consultants Inc.

Z:\2023 FBC Drawings\Associated Materials, Inc\FL-46697\FL-46697.5.dwg

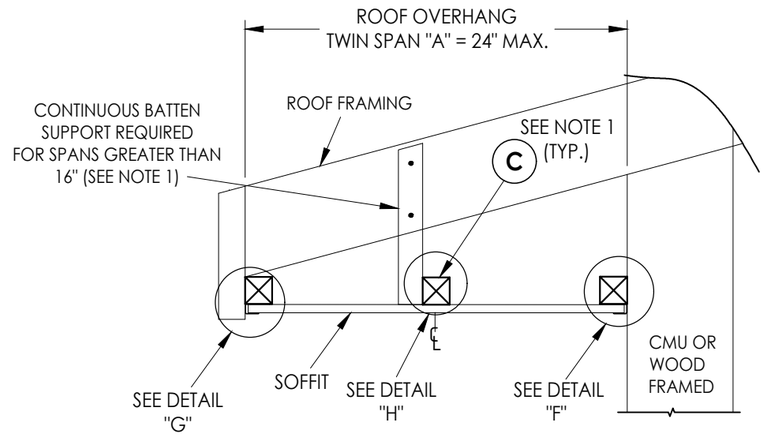

SIDE VIEW - TWIN SPAN w/ FASCIA & J-CHANNEL

(Shown w/ truss/framing overhang)

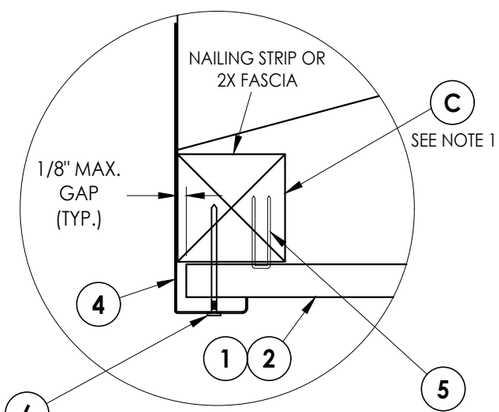

DETAIL "G"

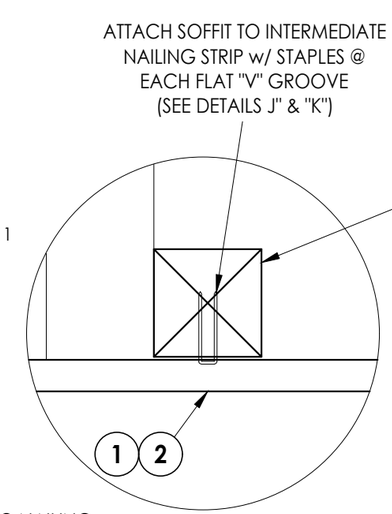

DETAIL "H"

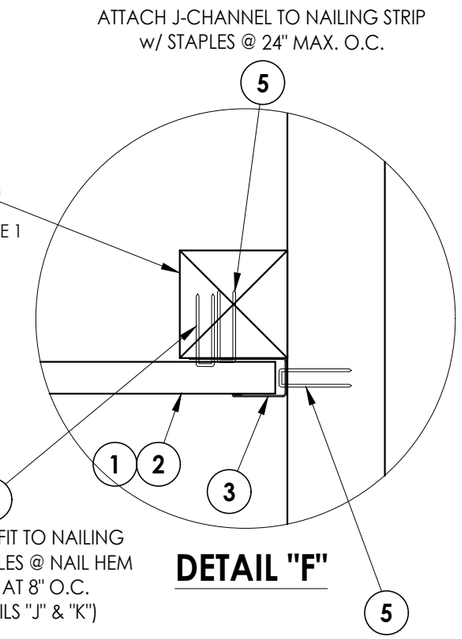

DETAIL "F"

TWIN SPAN w/ FASCIA & J-CHANNEL			
QUAD 4 (Q4) SOFFIT 24" MAX. TWIN SPAN LENGTH	SPAN "A"	DESIGN PRESSURE (PSF)	
		POSITIVE	NEGATIVE
SOLID SOFFIT	16"	+50	-50
	20"	+30	-30
	24"	+20	-20
FULL VENT SOFFIT	16"	+80	-60
	20"	+40	-40
	24"	+20	-20

REFER TO THE SOFFIT STAPLE INSTALLATION BELOW

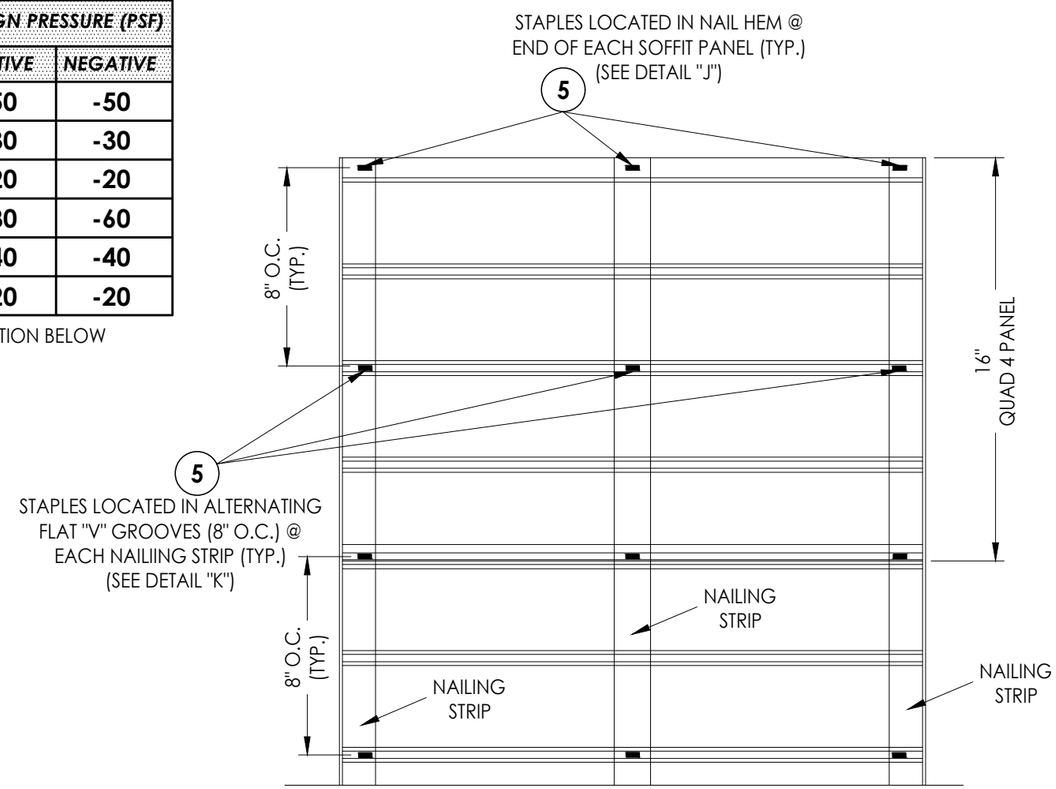

24" MAX. DOUBLE SPAN

(FASCIA & J-CHANNEL NOT SHOWN)

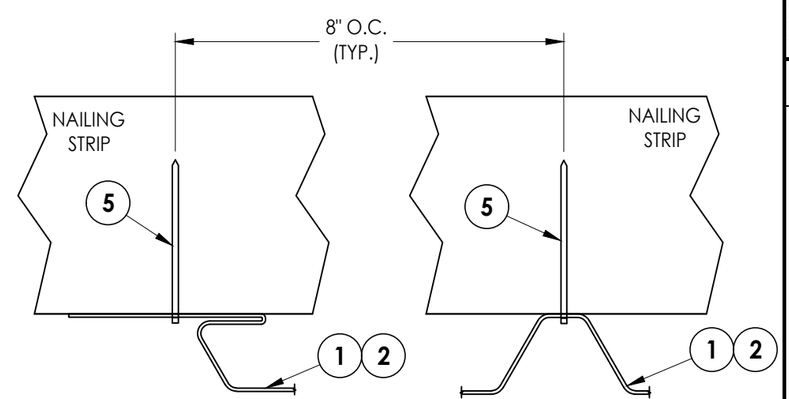

DETAIL "J"

STAPLE @ HEM

DETAIL "K"

STAPLE @ FLAT "V" GROOVE

NOTES:

1. WOOD FRAMING, NAILING STRIPS AND CONNECTIONS TO BE DESIGNED BY THE ARCHITECT OR ENGINEER OF RECORD.
2. STAPLES & NAILS SHALL BE CORROSION RESISTANT AND PENETRATE A MINIMUM OF 7/8" INTO SUPPORT FRAMING.

Documents Prepared By:
Lyndon F. Schmidt
P.E. No. 43409

RW BUILDING CONSULTANTS, INC.
P.O. Box 230, Valrico, FL 33595
Phone No.: 813.659.9197
FBPE Registry No. 9813

PRODUCT: ALUMINUM SOFFIT

PART OR ASSEMBLY: TWIN SPAN SOFFIT DETAILS & DESIGN PRESSURES

NO.	DATE	REVISIONS	BY

DATE: 5/19/25
SCALE: N.T.S.
DWG. BY: LFS
CHK. BY: RW
DRAWING NO.: FL-46697.5
SHEET 5 OF 6

© 2025 R.W. Building Consultants Inc.

Z:\2023 FBC Drawings\Associated Materials, Inc\FL-46697\FL-46697.5.dwg

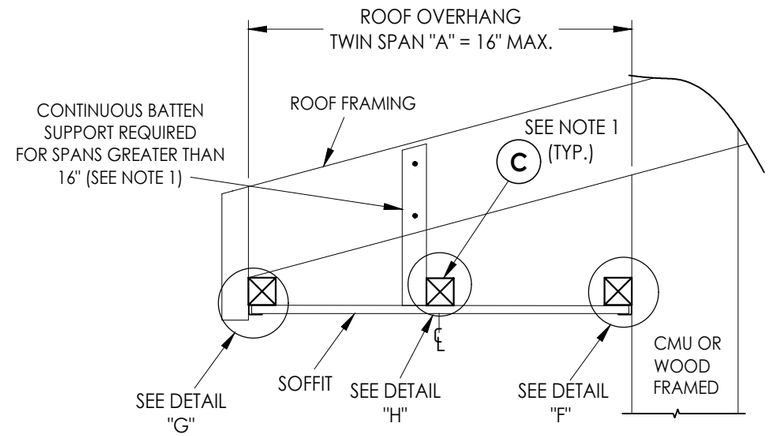

SIDE VIEW - TWIN SPAN w/ FASCIA & J-CHANNEL

(Shown w/ truss/framing overhang)

TWIN SPAN w/ FASCIA & J-CHANNEL			
QUAD 4 (Q4) SOFFIT 16" MAX. TWIN SPAN LENGTH	SPAN "A"	DESIGN PRESSURE (PSF)	
		POSITIVE	NEGATIVE
SOLID SOFFIT	16"	+90	-90

REFER TO THE SOFFIT NAIL INSTALLATION BELOW

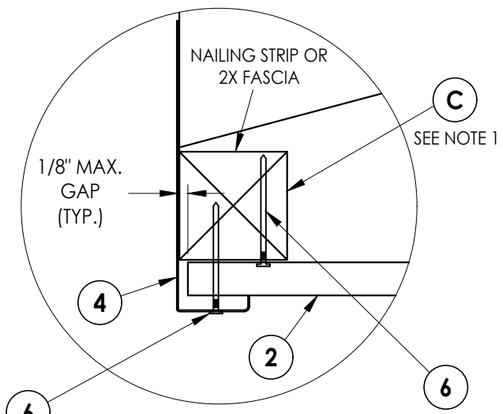

DETAIL "G"

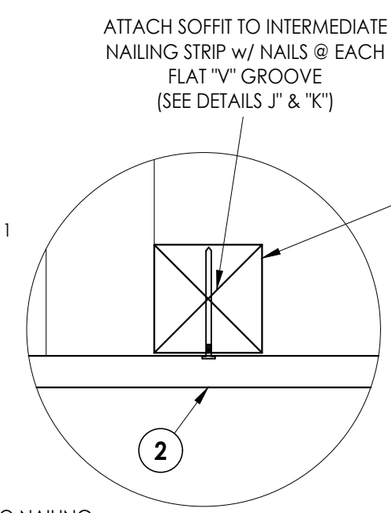

DETAIL "H"

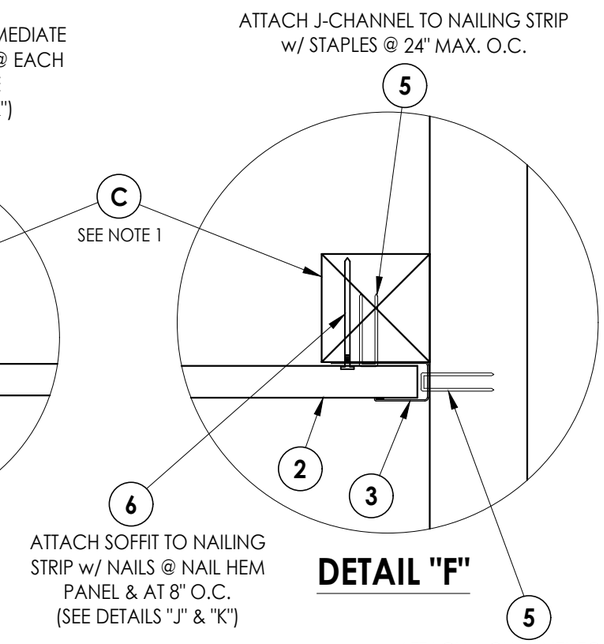

DETAIL "F"

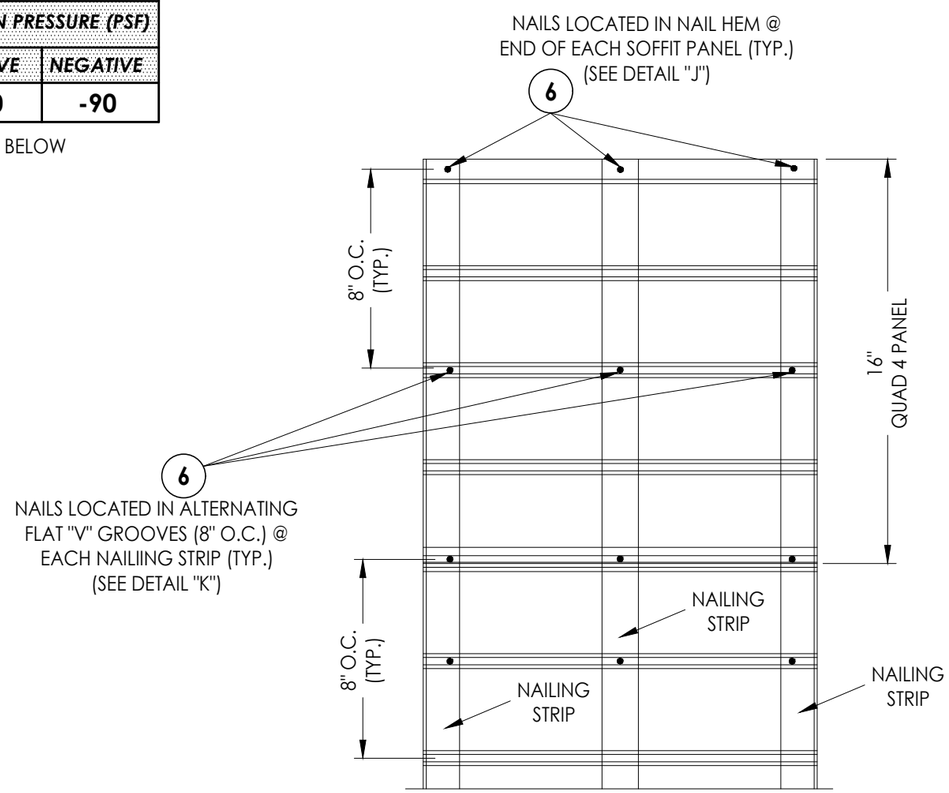

16" MAX. DOUBLE SPAN

(FASCIA & J-CHANNEL NOT SHOWN)

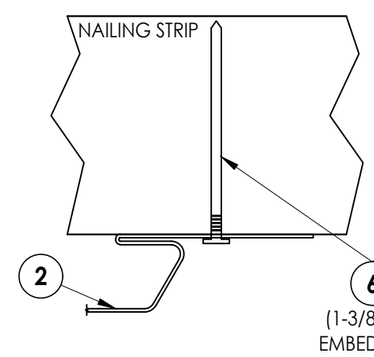

DETAIL "J"

NAIL @ HEM

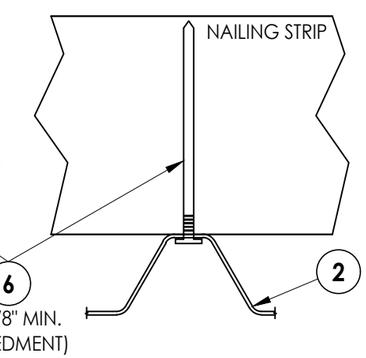

DETAIL "K"

NAIL @ FLAT "V" GROOVE

NOTES:
1. WOOD FRAMING, NAILING STRIPS AND CONNECTIONS TO BE DESIGNED BY THE ARCHITECT OR ENGINEER OF RECORD.
2. STAPLES & NAILS SHALL BE CORROSION RESISTANT AND PENETRATE A MINIMUM OF 7/8" INTO SUPPORT FRAMING (EXCEPT WHERE SHOWN).

Documents Prepared By:
Lyndon F. Schmidt
P.E. No. 43409
RW BUILDING CONSULTANTS, INC.
P.O. Box 230, Valrico, FL 33595
Phone No.: 813.659.9197
FBPE Registry No. 9813

PRODUCT: ALUMINUM SOFFIT

PART OR ASSEMBLY: TWIN SPAN SOFFIT DETAILS & DESIGN PRESSURES

NO.	DATE	REVISIONS	BY

DATE: 5/19/25
SCALE: N.T.S.
DWG. BY: LFS
CHK. BY: RW
DRAWING NO.: FL-46697.5
SHEET 6 OF 6

© 2025 R.W. Building Consultants Inc.

Z:\2023 FBC Drawings\Associated Materials, Inc\FL-46697\FL-46697.5.dwg